Dimensions: SY5000 Series

[ ]: AC

3 position closed center / exhaust center / pressure center

Grommet (G), (H): SY5$^{3}_{5}$20-□$^{G}_{H}$□□-$^{C4, N3}_{C6, N7}$□(-F2)
C8, N9

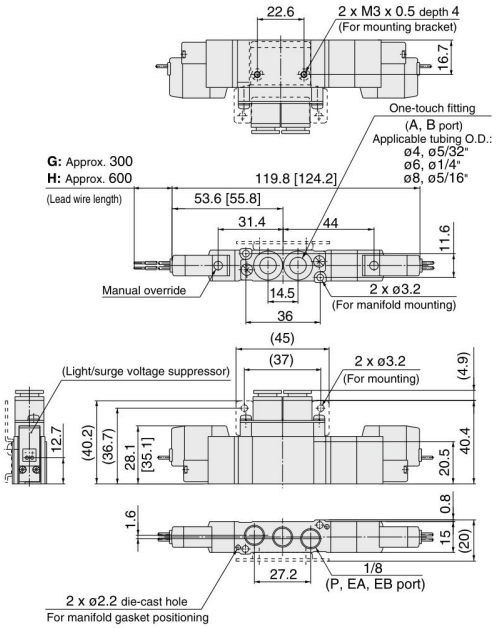

SY5$^{3}_{5}$20-□$^{G}_{H}$□□-01□(-F2)

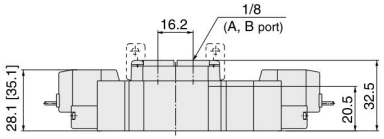

L plug connector (L):
SY5$^{3}_{5}$20-□L□□-$^{C4, N3}_{C6, N7}$□(-F2)
C8, N9

M plug connector (M):
SY5$^{3}_{5}$20-□M□□-$^{C4, N3}_{C6, N7}$□(-F2)
C8, N9
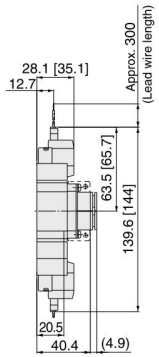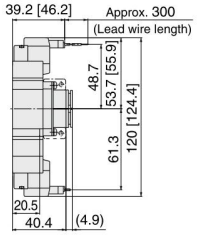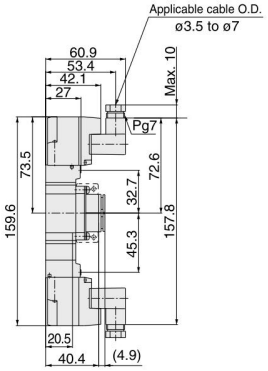
DIN terminal (D, Y):
SY5$^{3}_{5}$20-□$^{D}_{Y}$□□-$^{C4, N3}_{C6, N7}$□(-F2)
C8, N9